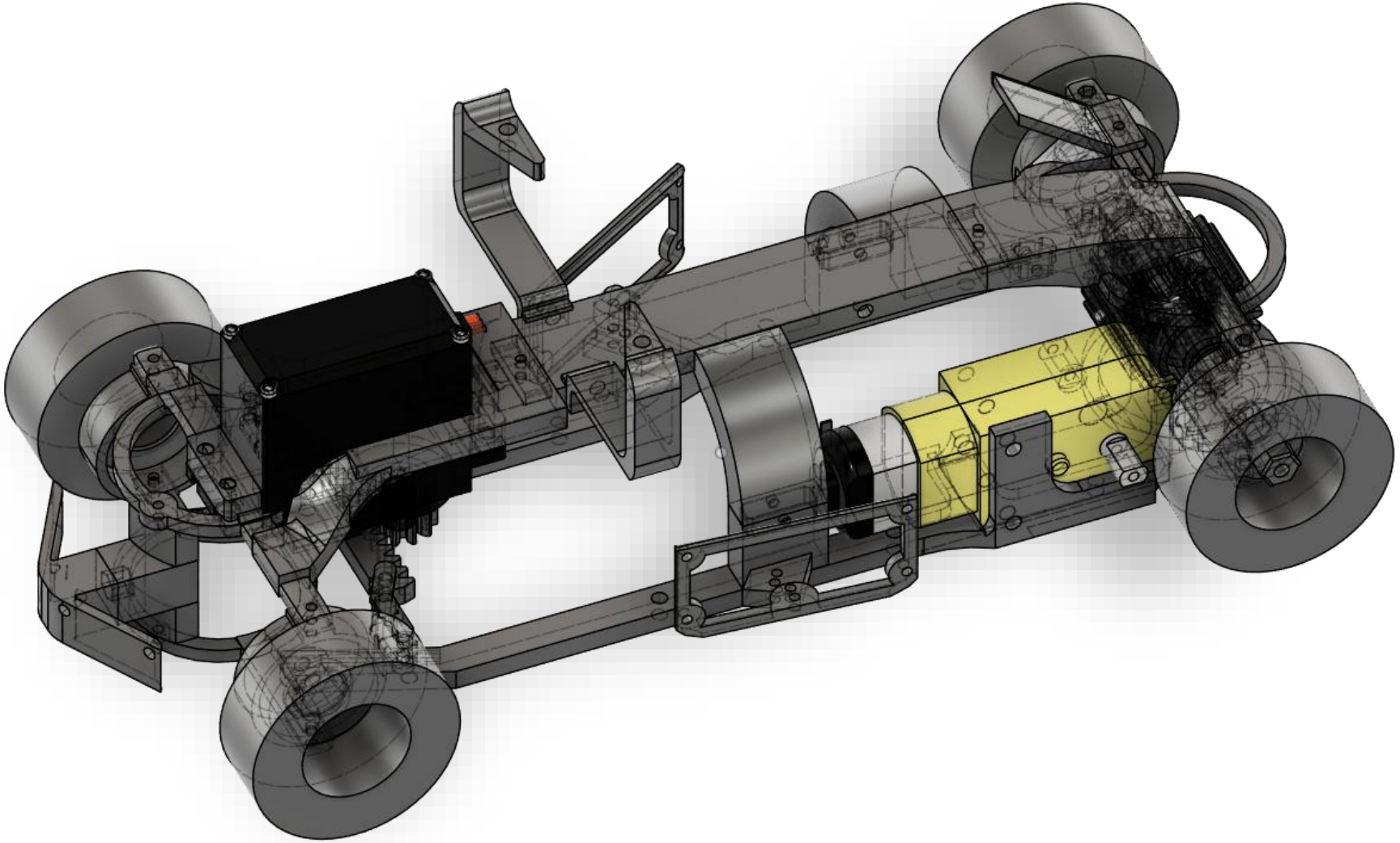

EC26 ASSEMBLY MANUAL

To assemble this vehicle you will need specific tools like M2 & M3 screws and screwdrivers depending on your screw choice. Also you will need a fdm printer. we recommend using PETG since is the material we used and proved to be effective. Last but not least you may need some basic knowledge on 3d manufacturing as tolerances may vary between printers and parts may not fit well.

TABLE OF CONTENTS

1. to 4. Parts needed for assembly:

1. FRONT UPPER CHASSIS
2. FRONT BEARING L
3. STEERING PINION
4. RACK TO WHEEL JOINT
5. RACK
6. FRONT BEARING R
7. AXLE GEAR
8. SPIDER GEAR
9. SPIDER GEAR JOINT
10. DIFFERENTIAL TO AXLE JOINT L
11. DIFFERENTIAL TO AXLE JOINT R
12. DIFFERENTIAL INNER CASE
13. SERVO MOTOR (MG996R)
14. TT MOTOR
15. CYTRON MOTION PRO RP2350
16. FRONT SENSOR HUB
17. REAR AXLE L
18. WHEEL HUB
19. UPPER CHASSIS
20. MCU & BATTERY HOLDER
21. REAR BEARING
22. DIFFERENTIAL DRIVE GEAR
23. LOWER CHASSIS
24. REAR AXLE R

8. to 13: Front assembly (steering system)

14. to 24: Rear assembly (differential & rear axles)

25 to 30: Chassis (chassis, hardware mounts and power drive

1.

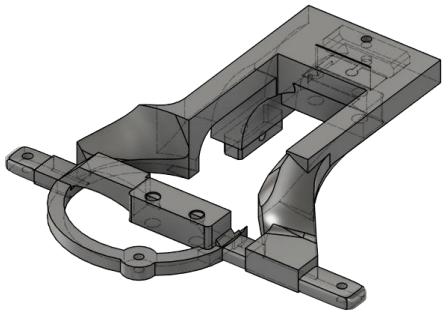

2.

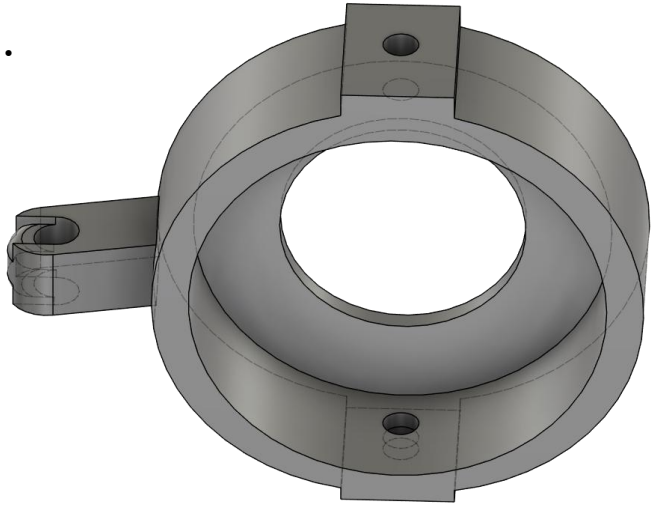

3.

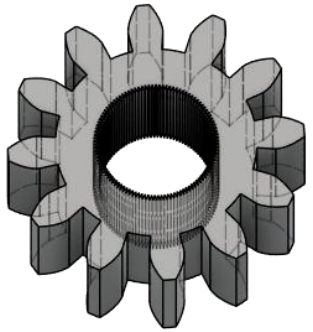

4.

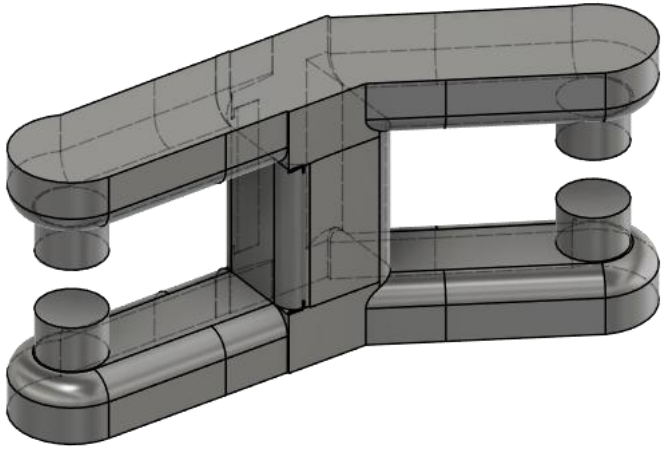

5.

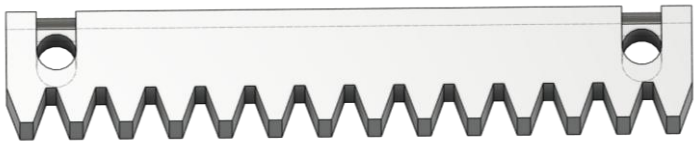

6.

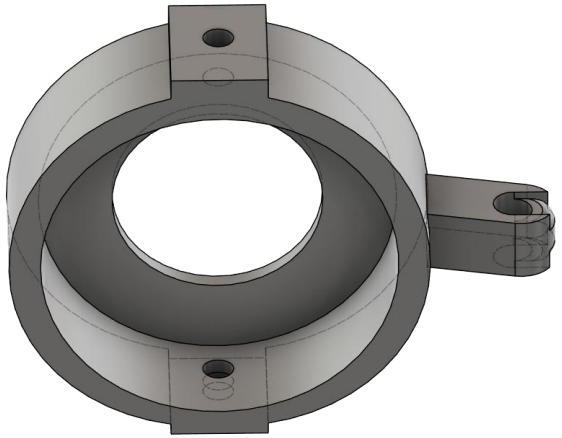

7.

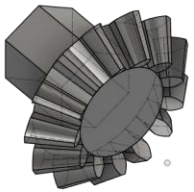

8.

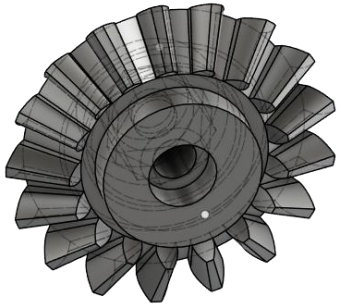

9.

10.

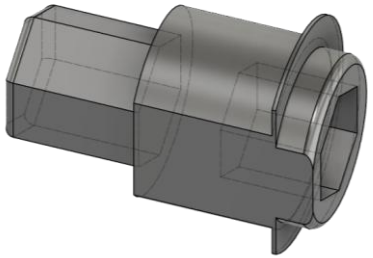

11.

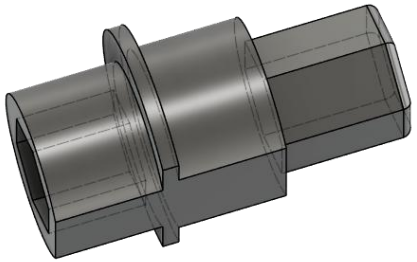

12.

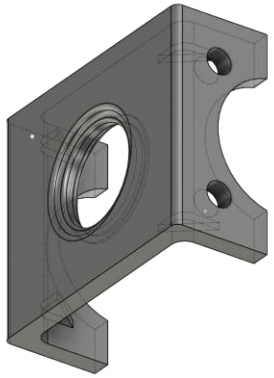

13.

14.

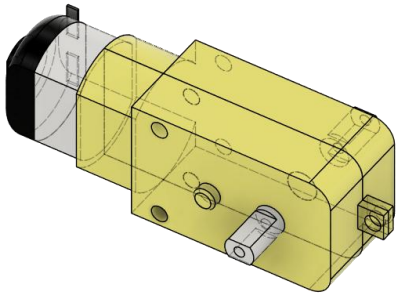

15.

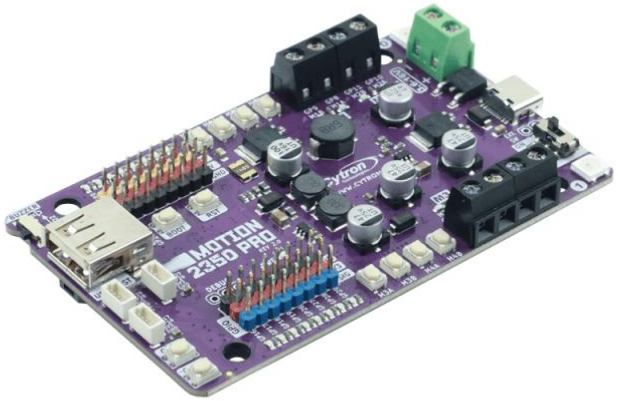

16.

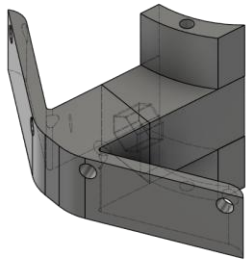

17.

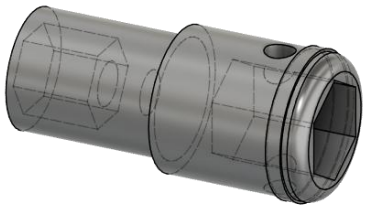

18.

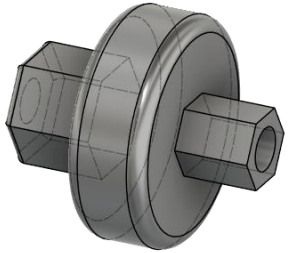

13.

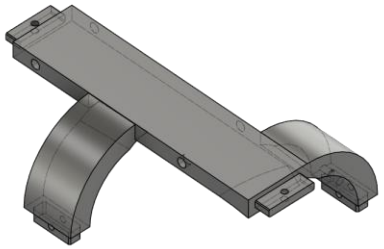

14.

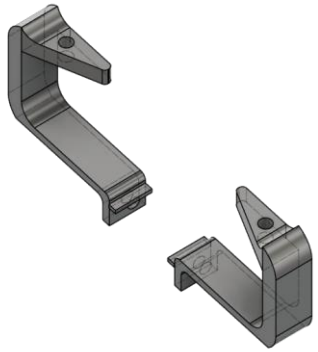

15.

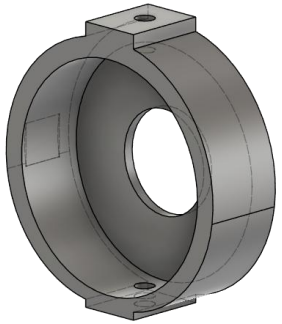

16.

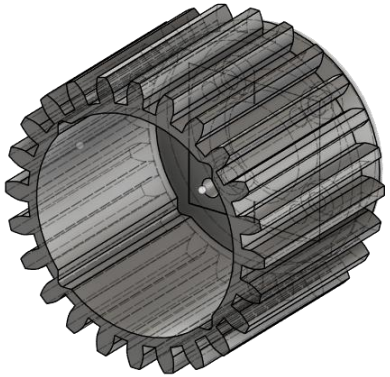

17.

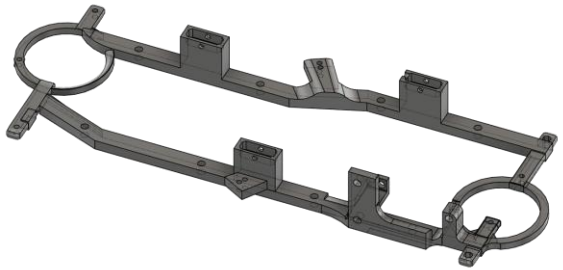

18.

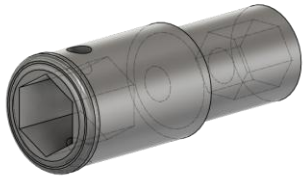

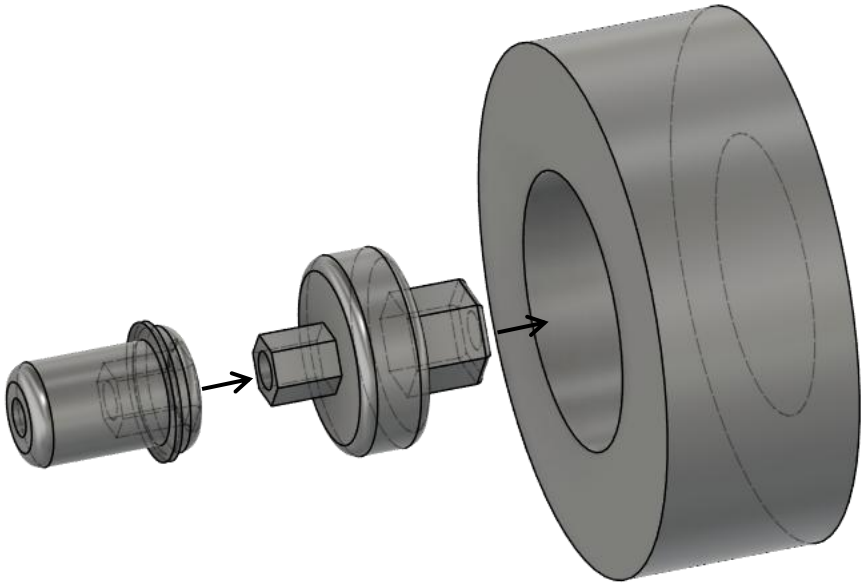

Prepare front wheels for front assembly (you can choose any wheels of your preferences but you may have to adapt pieces

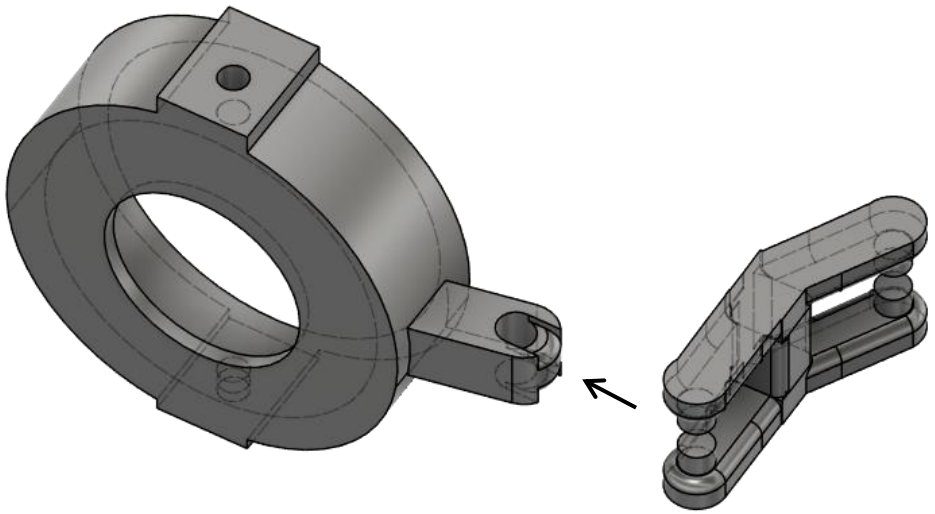

Joint front bearings with the rack joint (x2)

Joint front bearing to rack (both sides!)

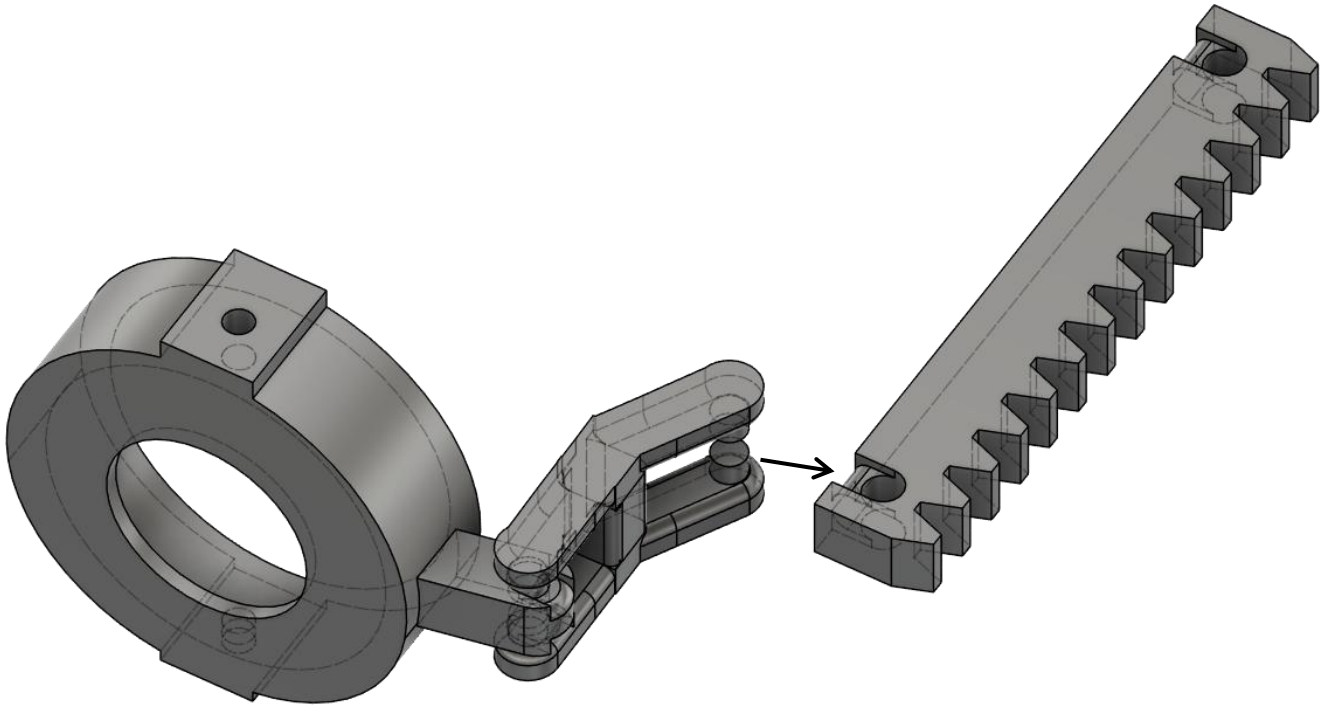

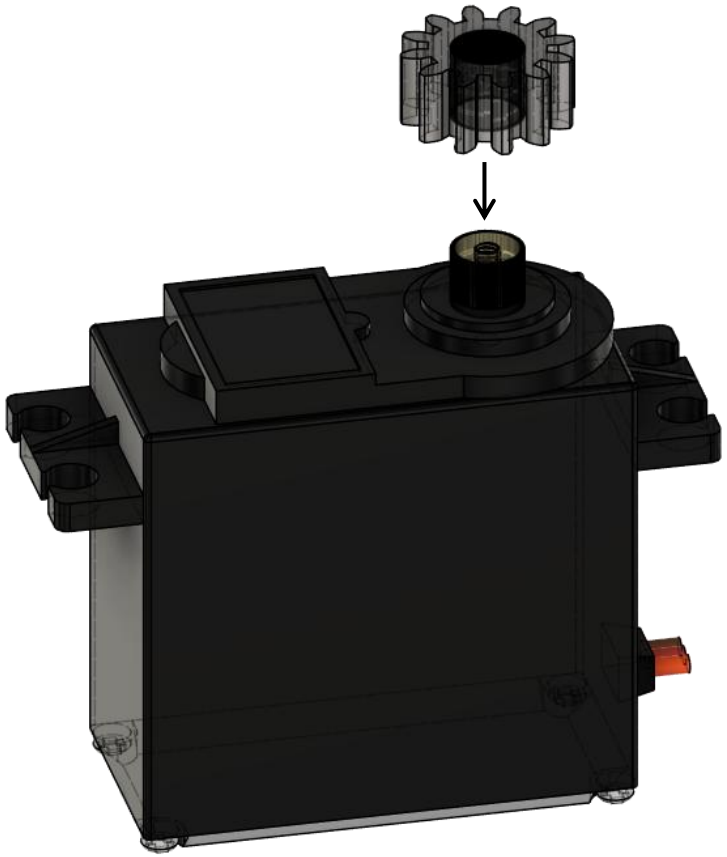

Insert pinion on
MG996R servomotor

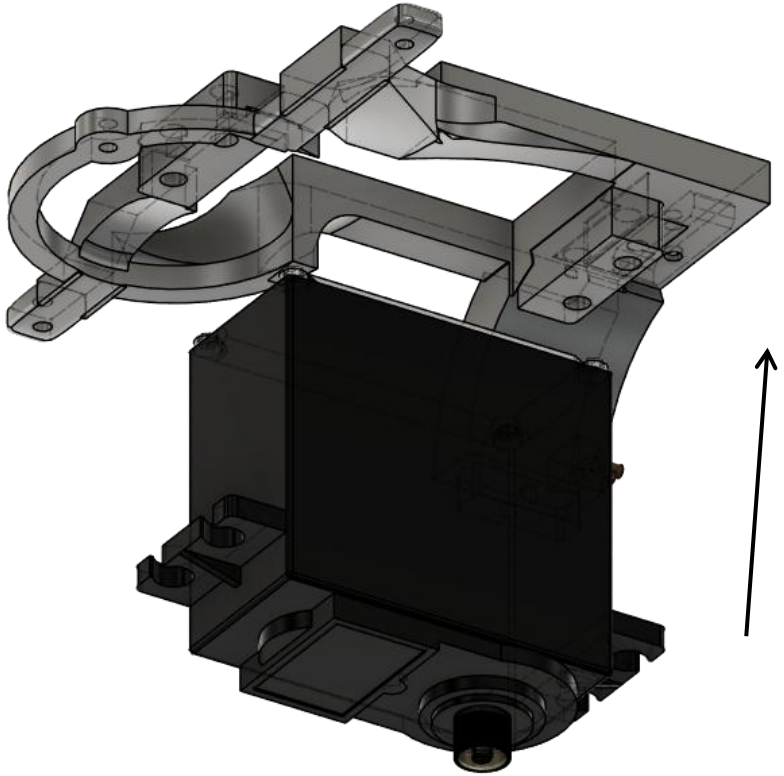

Insert MG996R in the front chassis (be careful with the cable!) Make sure to screw it in place with M3 screws of your preference.

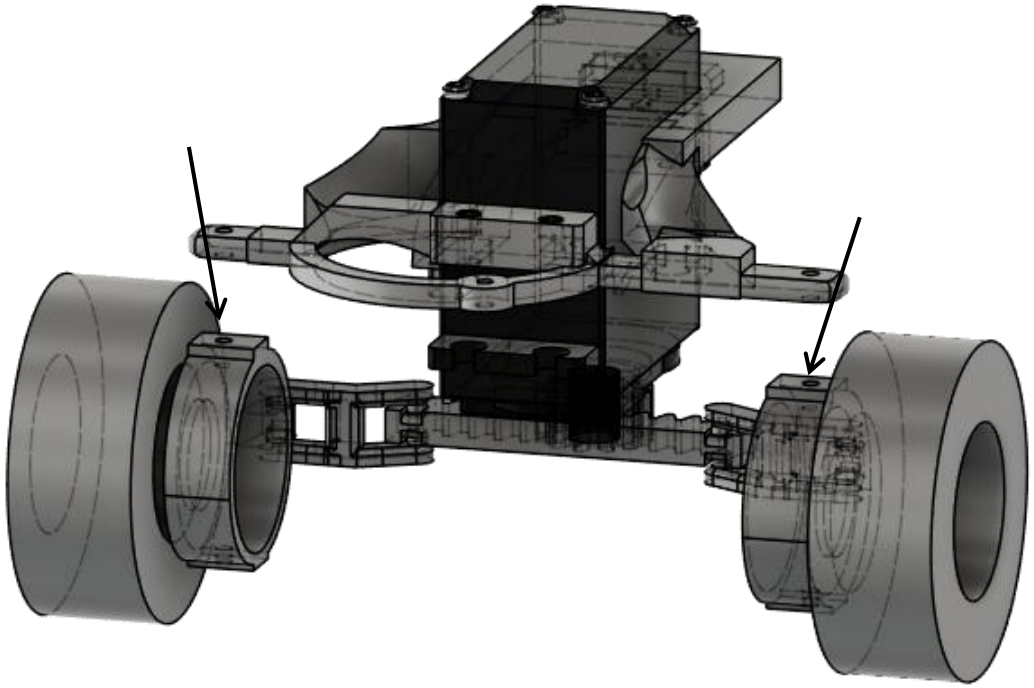

Assemble chassis to steering system

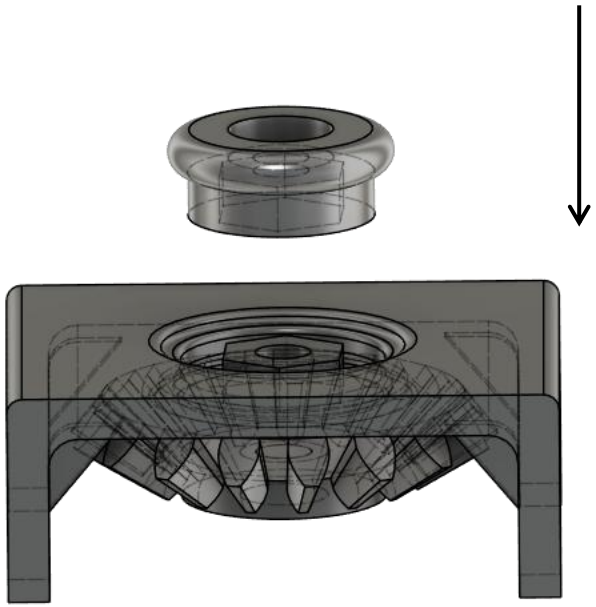

Insert the spider gears on the case and secure them with the joint (x2)

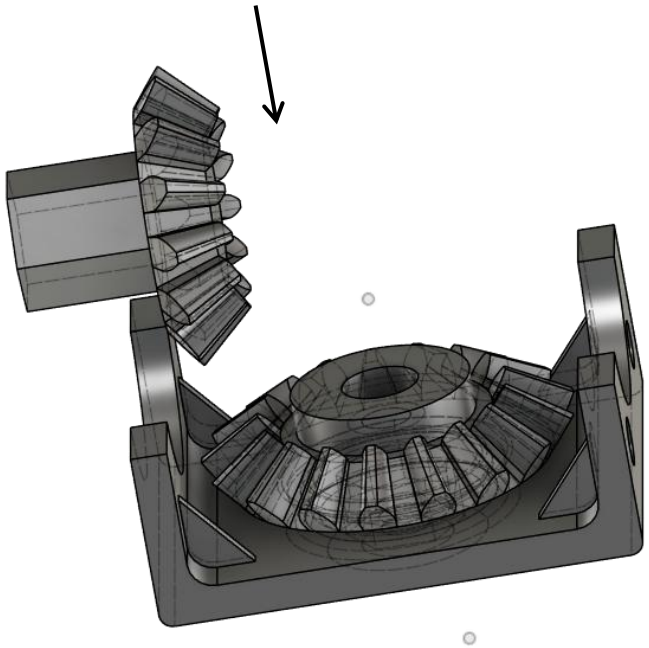

Hold pinion on the differential assembly (both sides).

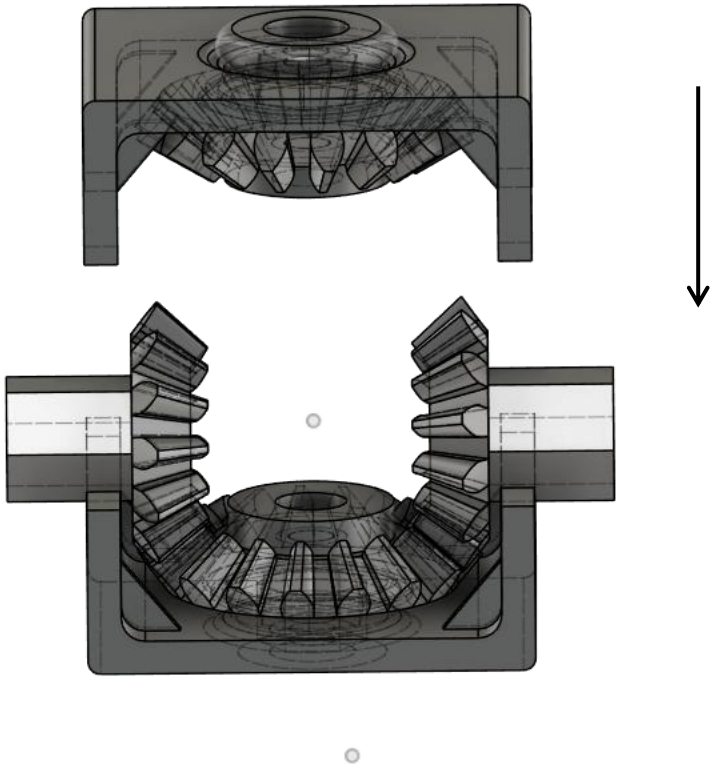

While holding the pinions put on the other assembly of the inner case

Make sure to screw it in place once inserted (x4 M2 screw)

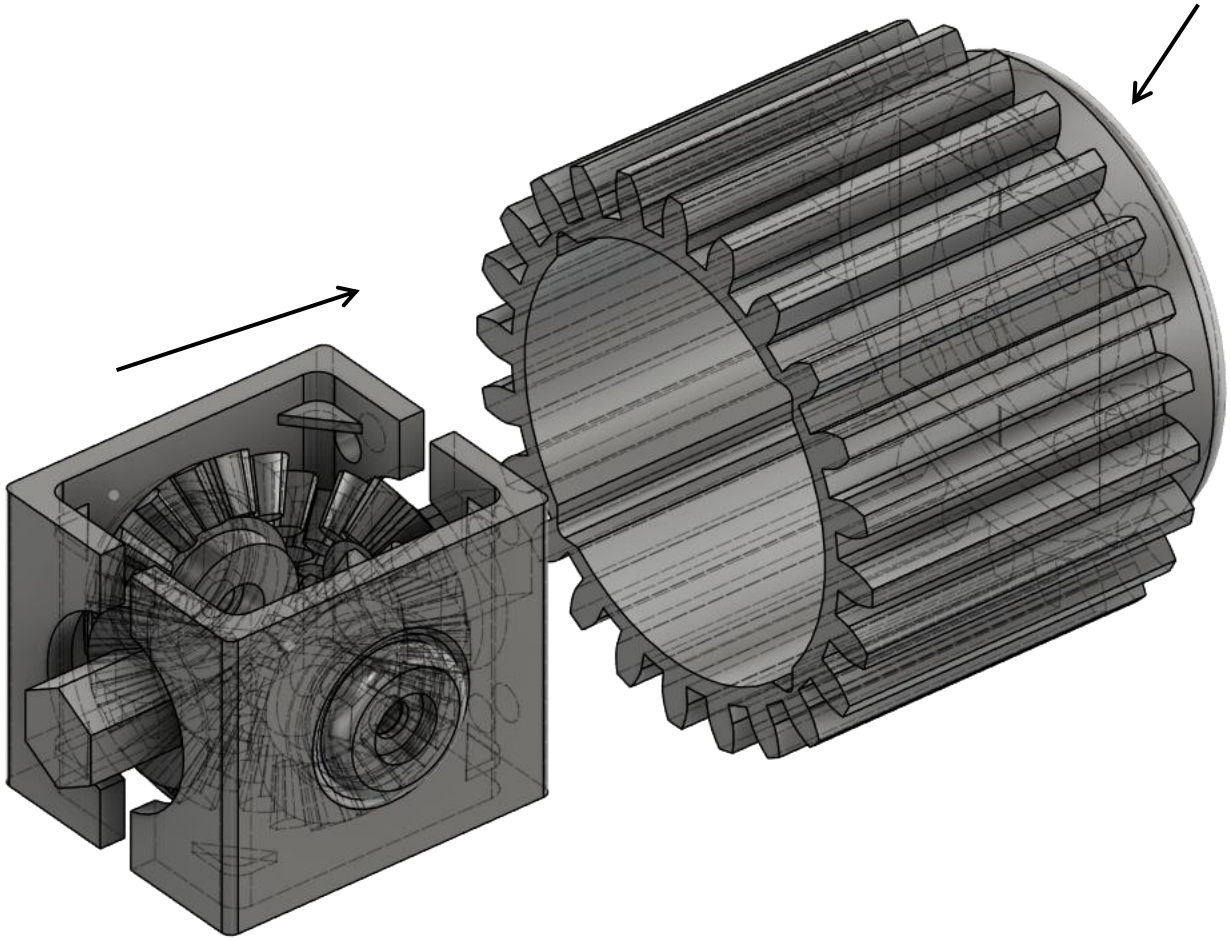

Now carefully insert the inner case assembly in the differential outer case

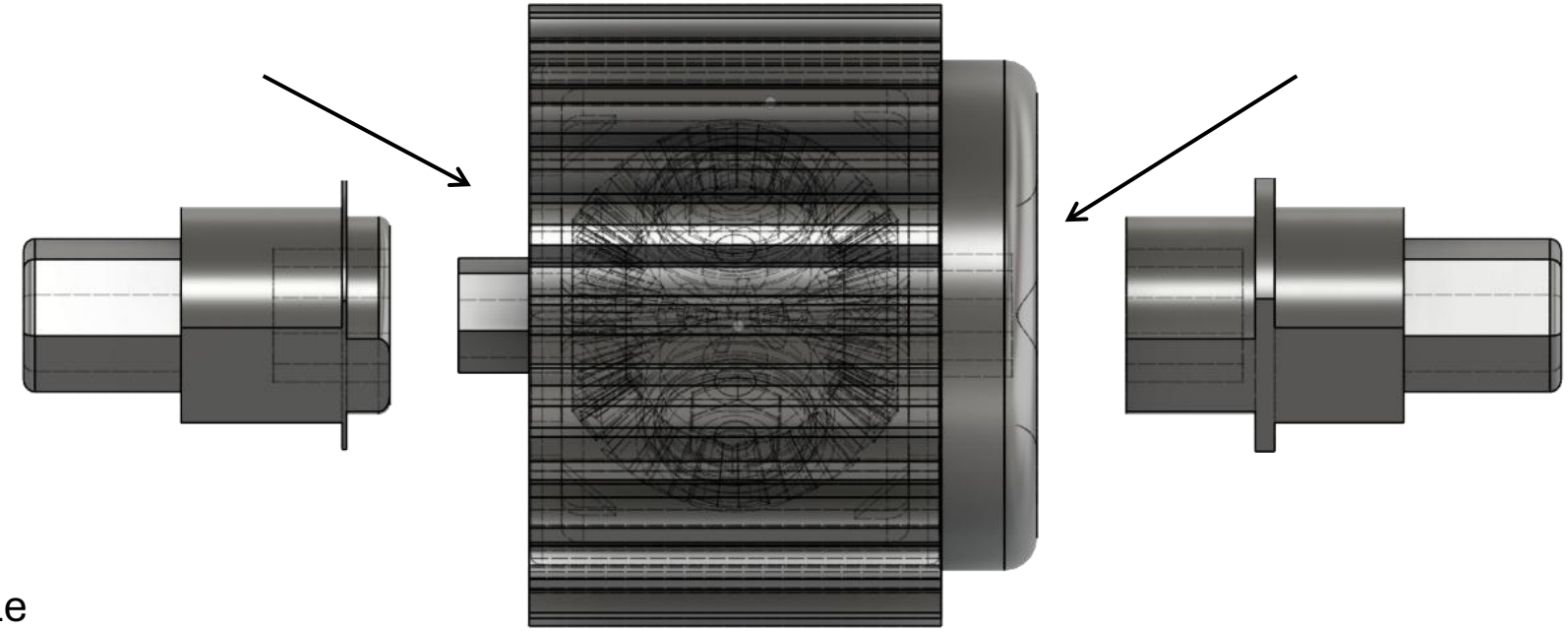

Assemble the axle joints in the differential pinions

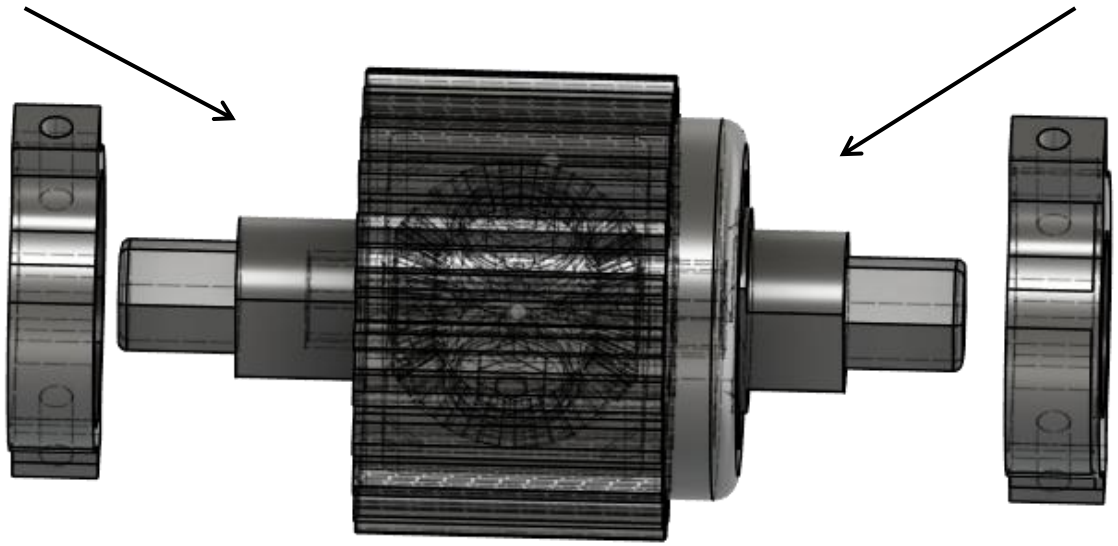

Insert the bearings that hold the differential in place

Assemble the axles (there is M2 screw holes in case it gets too loose)

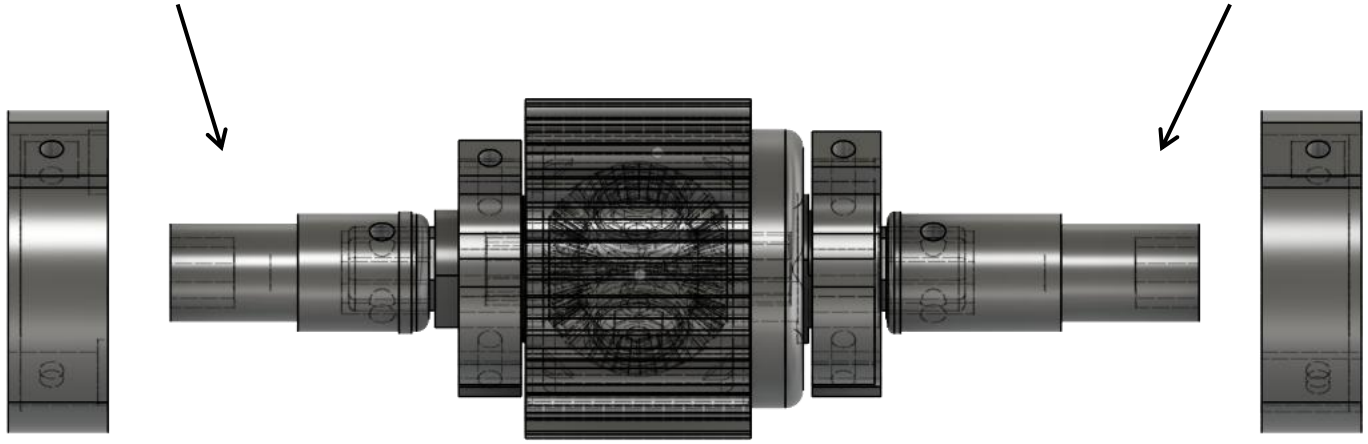

Insert the wheel bearings

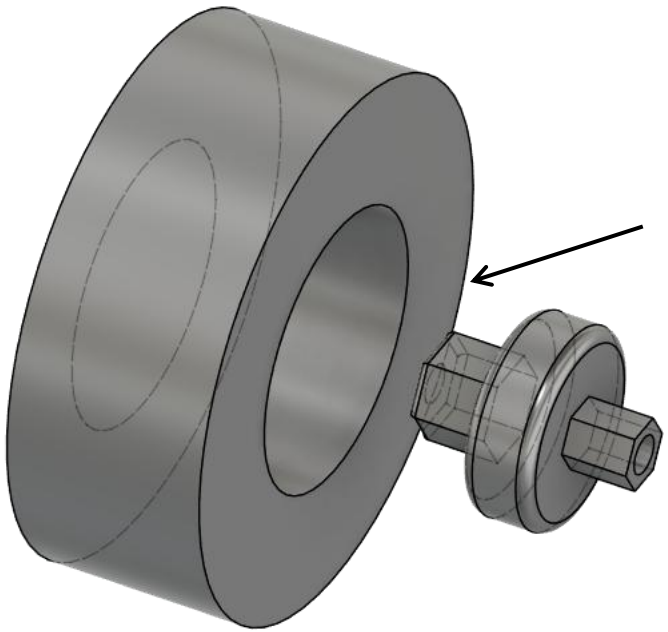

Prepare the rear wheels

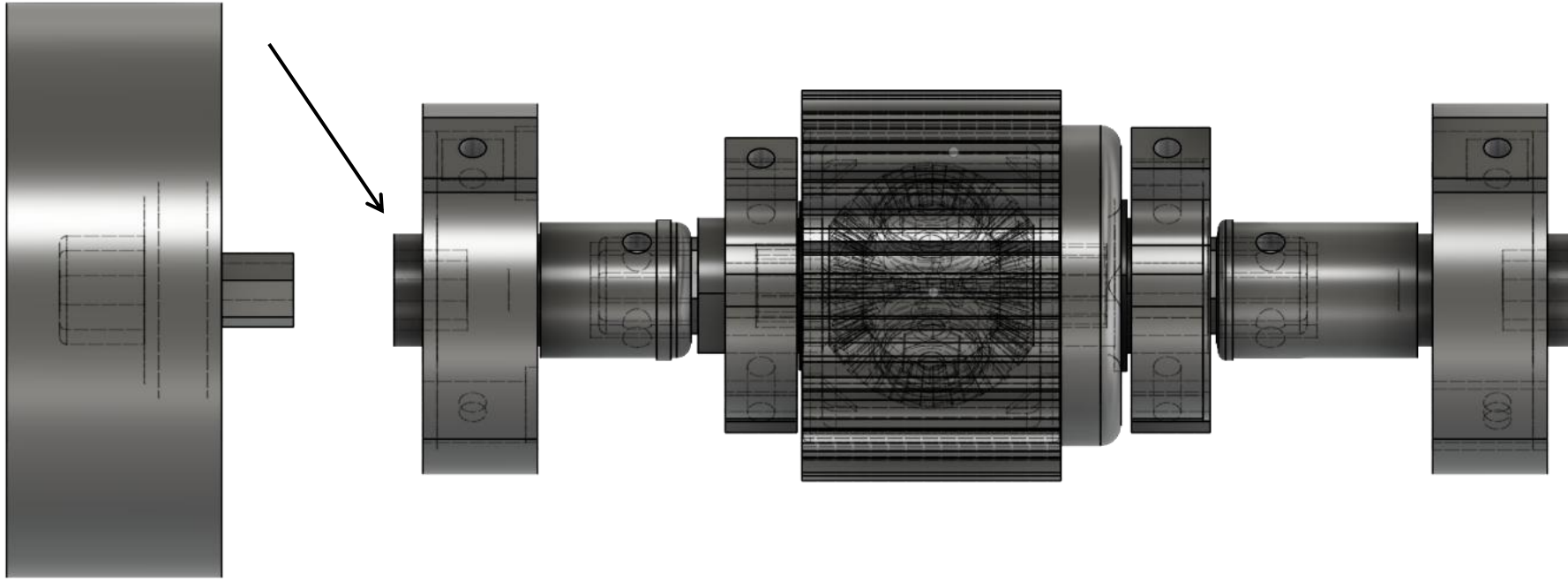

Joint the rear wheel
(both sides)

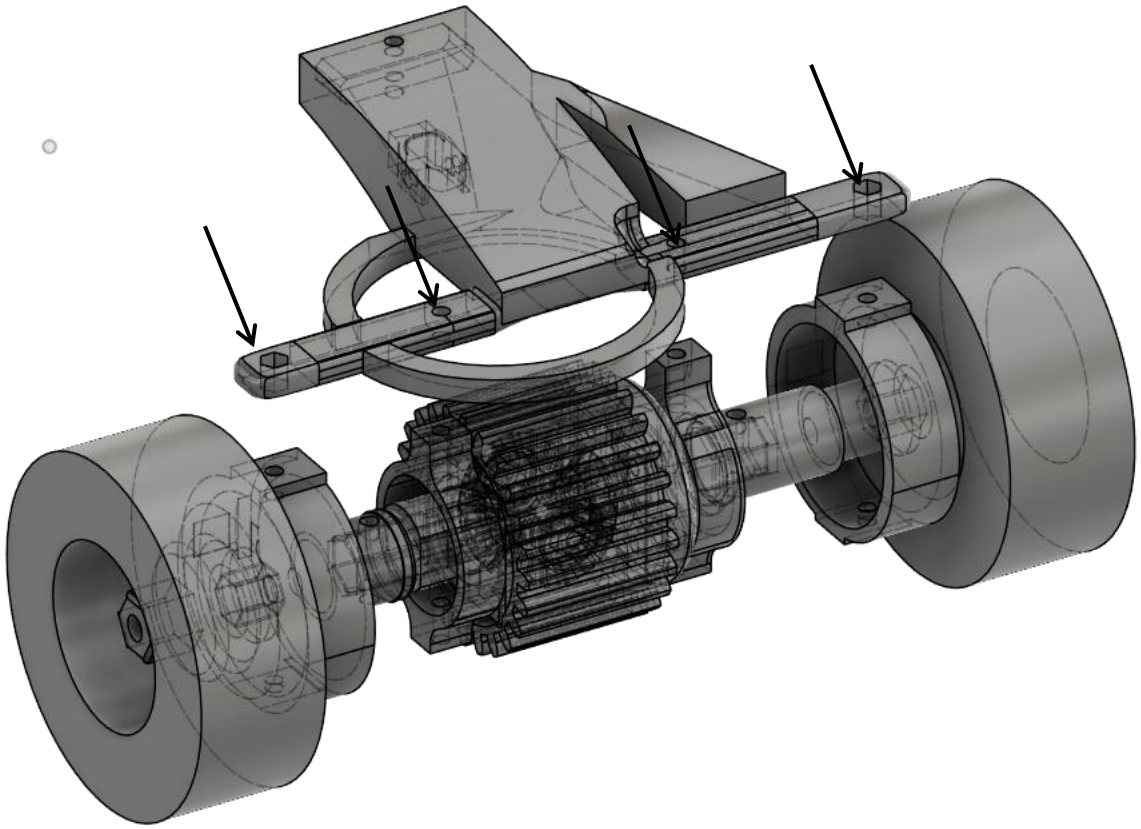

Screw the rear assembly to the chassis (M2 of your preference)

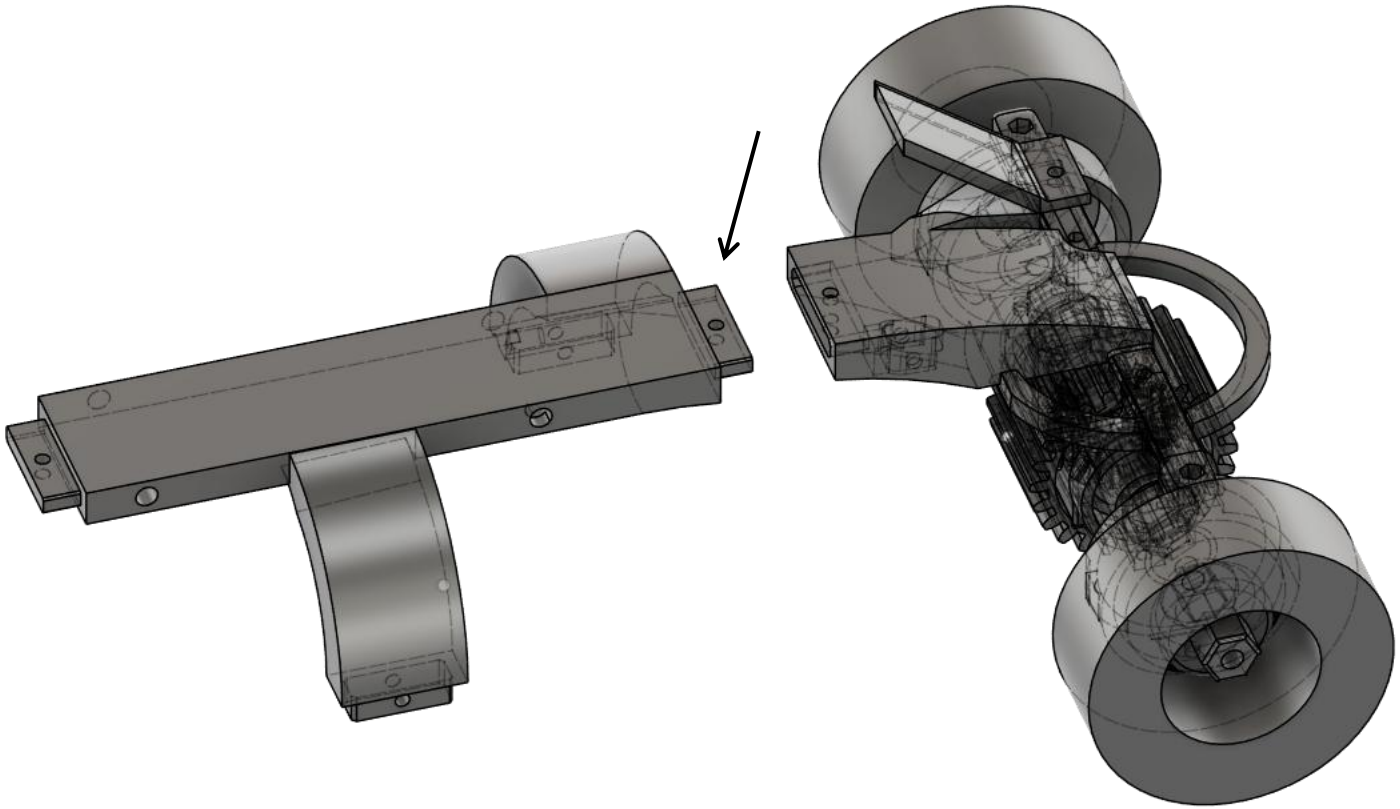

Connect to the main chassis

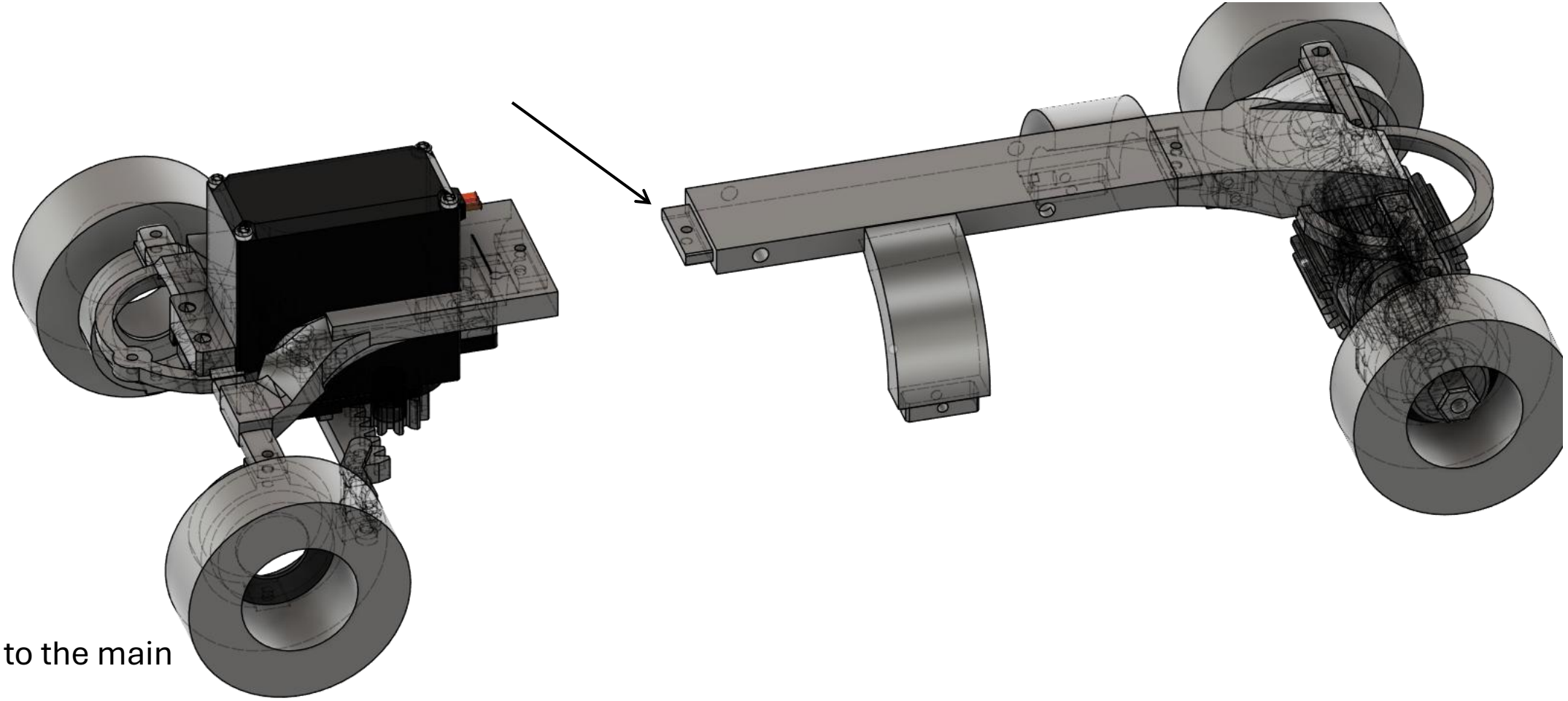

Connect to the main chassis

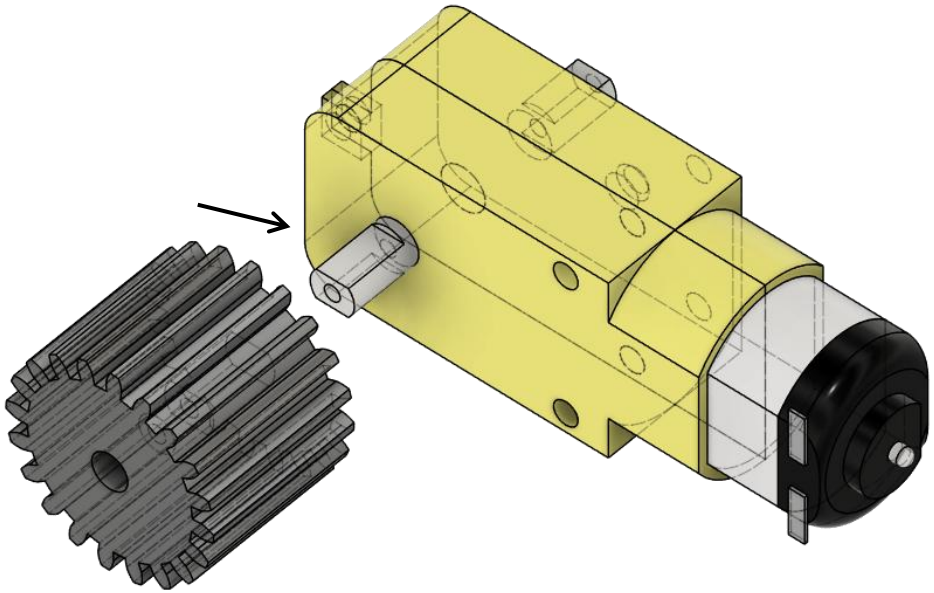

Joint power drive to TT motor

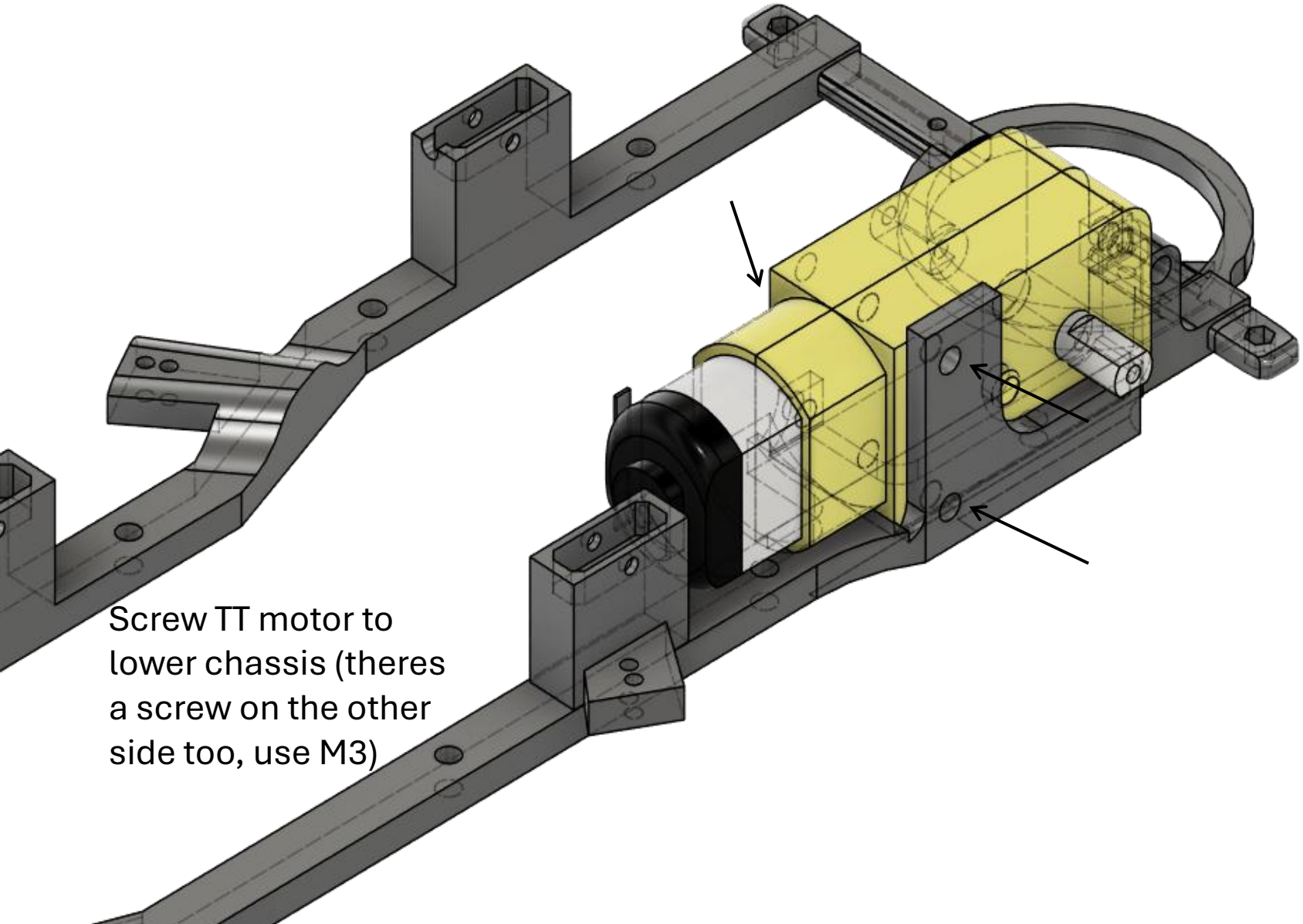

Screw TT motor to lower chassis (theres a screw on the other side too, use M3)

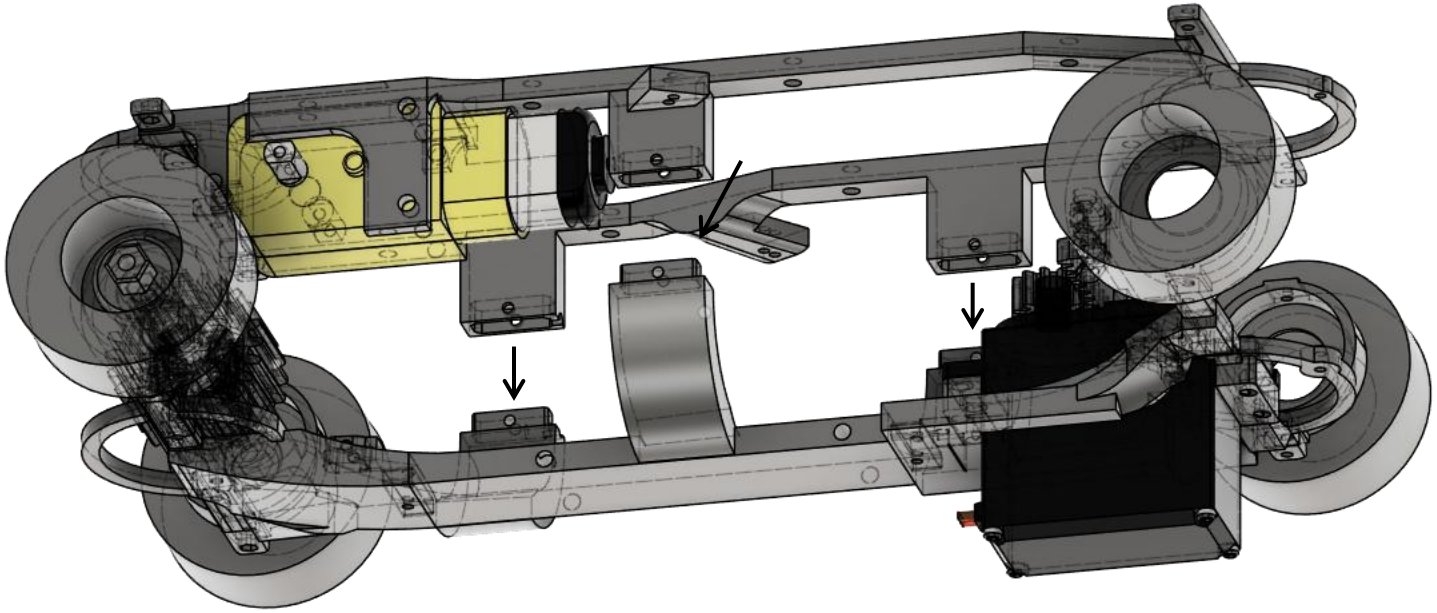

Joint lower and upper chassis

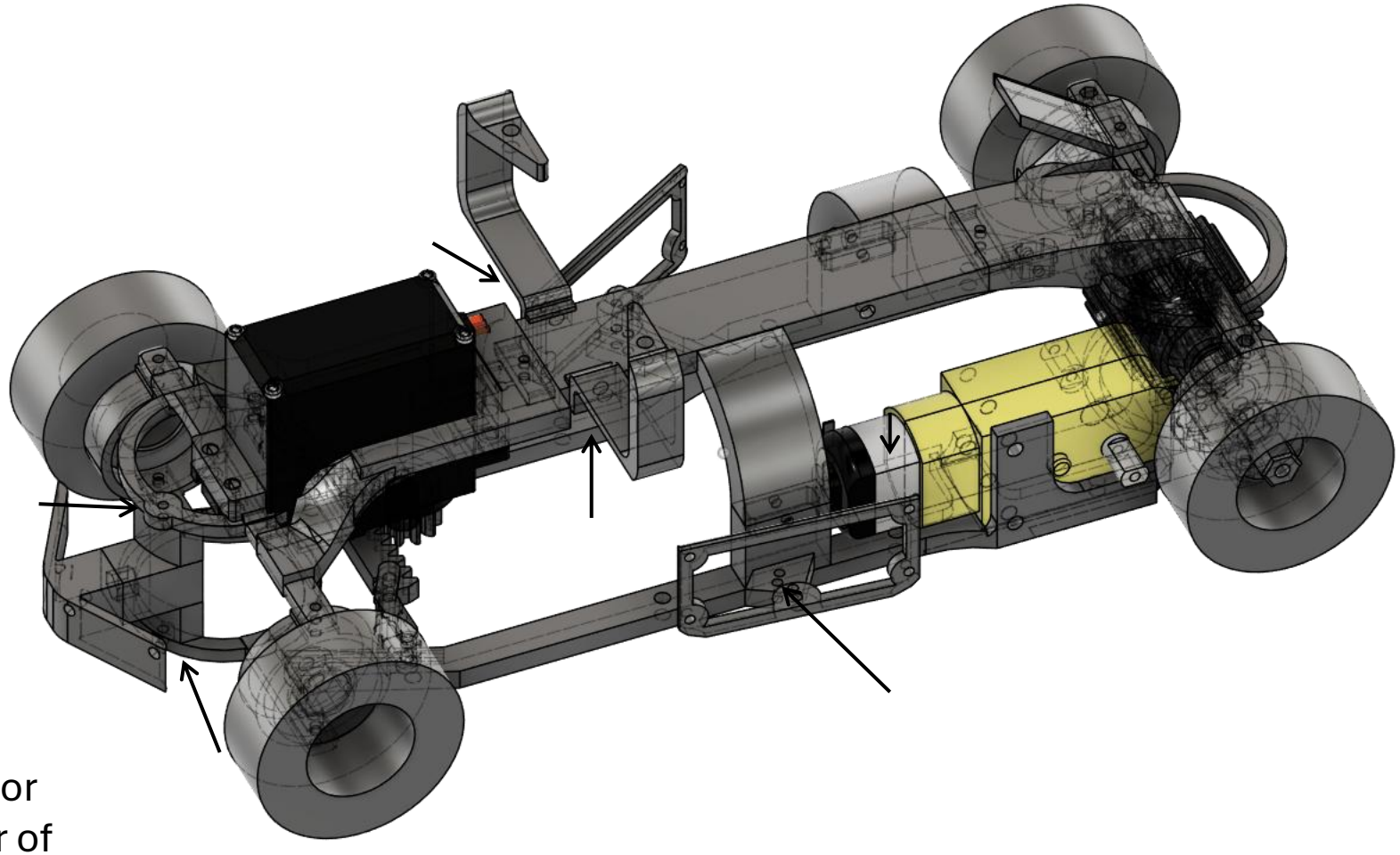

Assemble sensor mounts (sensor of your preference, use M2)